Solar Access to Public Capital Working Group

Tandem Tax Equity and Securitization Mock Filing:

Term Sheet and Structure Diagrams

December 2014

NREL
NATIONAL RENEWABLE ENERGY LABORATORY

NREL is a national laboratory of the U.S. Department of Energy
Office of Energy Efficiency and Renewable Energy
Operated by the Alliance for Sustainable Energy, LLC

Background and Purpose of this Project

- Solar Access to Public Capital (SAPC) is a working group comprised of volunteer members from across the solar industry, supporting service industries and government that have joined together to work on a variety of projects intended to educate investors, rating agencies and other stakeholders regarding the solar energy industry and solar assets and to standardize terms applicable to the various contracts, processes and financing techniques used to originate and fund solar asset portfolios so as to expand the sources of capital available to the solar industry.

- One aspect of that process has been the structuring and presentation to potential issuers, investors and rating agencies of mock securitization transactions based on the belief that securitization can provide an efficient form of financing for portfolios of solar assets.

  - Early on it became clear that one potential impediment to securitization of solar energy assets is the competing interests of two types of investors, tax equity investors and debt investors, and that development of a financing structure that could accommodate both types of funding was of interest to many SAPC members.

- The Tandem Tax Equity and Securitization structure presented herein has been developed as a mock transaction by SAPC, with input from a variety of stakeholders, so as to address that need.

  - It has been presented to rating agencies, investors and issuers and incorporates their feedback.
  - It has been vetted against a financial model using projected cashflows from an actual solar asset portfolio.
  - We believe it provides terms for a transaction that will satisfy the needs of solar developers, tax equity investors, and debt investors.
  - We continue to welcome feedback on the terms, structure or other aspects of the mock transaction presented herein.

Summary of Terms: Transaction Parties

SolarCo – the sponsor of the transaction and manager of the solar assets

SolarCo is a corporation engaged (directly or through affiliates) in the development, management and operation of solar energy generating systems ("*Solar Energy Systems*")

- As sponsor, SolarCo will oversee the acquisition and/or design and of each Solar Energy System
  - It will arrange for a long term site leases or other site access agreement with the property owner where each Solar Energy Systems are installed (collectively, "*Site Access Agreements*")
  - It will arrange for a host or other end user to enter into a long term contract to purchase power generated by each Solar Energy System (or to sublease it for a term of years) (collectively, the "*Host Contracts*")
  - It will also arrange for construction, bridge and term financing for the Solar Energy Systems
- As Manager, SolarCo will manage the pool of assets being securitized pursuant to a Management, Operations and Maintenance Agreement among Issuer, TenantCo and the Indenture Trustee
  - In that capacity, SolarCo will, among other services, act as master servicer by monitoring billing and collecting under the Host Contracts by the Sub-Servicer, monitor performance of the Solar Energy Systems, monitor performance of O&M services by any Sub-O&M Provider, pursue warranty claims against manufacturers, and prepare reports for investors
- See *Figure 1* for a diagram showing all the Transaction Parties

Summary of Terms: Transaction Parties

ProjectCo – the initial owner of the solar assets and contract counterparty

ProjectCo is a special purpose, Delaware limited liability company owned by SolarCo and formed to own the Solar Energy Projects during their development and construction phase

- ProjectCo acts as initial counterparty on the Master Lease (described below) and Host Contracts and as lessee under the Site Access Agreements
  - ProjectCo grants rights under the Site Access Agreements (collectively "*Access Rights*") to TenantCo in connection with the Master Lease and to Issuer (see below) in connection with the assignment of the Master Lease to Issuer.
- Immediately before each Solar Energy System is placed in service, ProjectCo sells and assigns the system, subject to the Master Lease, to the Issuer along with any Site Access Rights and reversionary rights under the related Host Contract.
  - The proceeds of the "sale" are used to retire any construction debt and reimburse construction costs incurred in developing the Solar Energy Systems.
  - If the Issuer is wholly owned by ProjectCo or SolarCo, it likely will be a disregarded entity as to which no "sale" will be deemed to occur for income tax purposes. However, liability for any sales tax on transfers of the Solar Energy Systems will need to be addressed in the agreements.
- ProjectCo also acts as Managing Member of each of Issuer and TenantCo pursuant to their LLC agreements and will make capital contributions and receive equity distributions as described below
  - Issuer will be required to be organized as a bankruptcy remote entity with an independent director and Rating Agencies may want the same for TenantCo

Summary of Terms: Transaction Parties

Issuer – transferee owner of solar assets and issuer of Asset Backed Notes

Issuer is a newly formed, bankruptcy-remote Delaware limited liability company formed to own and finance the pool of Solar Energy Systems and to act as "Master Lessor/Landlord" under one or more master lease(s) of such systems to one or more special purpose tenant entities (each referred to as a "*TenantCo*" and collectively, the "*TenantCos*")

- Issuer will be wholly owned by ProjectCo
- Issuer will issue the Notes, which are expected to represent approximately 60% of the total capital stack[1]
- Approximately 5-10% of the total capital in the transaction will come from SolarCo in the form of long term equity (via contributions to ProjectCo and/or TenantCo in exchange for membership interests) in those entities[2]

---

1 If the structure needs to accommodate multiple placed in service dates, the Issuer may need to obtain a bridge loan for approximately 12-18 months before issuing the securitization Notes. The bridge loan would advance funds simultaneously with contributions to capital by Tax Equity and long term equity as Solar Energy Systems are conveyed to Issuer and placed in service. At the end of this "Ramp-up Period," the bridge loan would be repaid with the proceeds from issuance of the Notes. The bridge loan would likely have a lower advance rate than the securitization Notes (e.g. 50%) and thus any additional proceeds from issuance of Notes would get paid to ProjectCo as a deferred purchase price (representing return of capital and/or development fee).

2 SolarCo could elect to bring other long term equity investors at ProjectCo before closing but likely would be expected to maintain control and minimum equity ownership in ProjectCo throughout the life of the transaction. Such long term equity investors likely would be corporations that could benefit from the depreciation deductions and other tax benefits related to the Solar Energy Systems that are not allocable to the Tax Equity, especially if TenantCo uses its tax equity contributions to fund prepayment of rent to ProjectCo rather than an investing in an equity interest in ProjectCo.

Summary of Terms: Transaction Parties

TenantCo – lessee under Master Lease and tax equity investment vehicle

Each TenantCo is a newly formed special purpose Delaware limited liability company formed to act as lessee under a Master Lease with ProjectCo.

- Pursuant to the Master Lease, TenantCo will have the exclusive right to control and operate the Solar Energy Systems for the term of the Master Lease and Master Lessor will agree to elect to pass through to TenantCo any investment tax credits associated with the Solar Energy Systems.
  - Each TenantCo will also assume the obligations under the Host Contracts for the duration of the Master Lease.
  - TenantCo will in turn provide a collateral assignment of its rights under the Host Contracts (and its rights under the Management and O&M Agreements) to the Master Lessor/Issuer to secure its obligation to pay rents under the Master Lease
- The Tax Equity and other investors in each TenantCo will invest an amount of cash equal to approximately 30-40% of the purchase price of the Solar Energy Systems leased by it. The proceeds so invested will be used to prepay to Issuer a portion of the rent under the Master Lease.[3]

3 Some structures allow TenantCo. to have an equity interest in the Master Lessor so as to maximize tax benefits available for monetization. However, if Tax Equity is willing to forego depreciation and the proceeds from the Tax Equity investment in TenantCo are instead used to prepay a portion of the rents under the Master Lease, an additional layer of investment by Tax Equity would be unnecessary and would allow for a cleaner securitization structure. Alternatively, if Tax Equity investment proceeds are not upstreamed via prepaid rent at closing, then TenantCo would need to acquire an interest in the Issuer, the Issuer would not be a disregarded entity and instead likely would be treated as a partnership for federal income tax purposes. Sponsors should evaluate (i) sources and uses of cash flow at Tenant Co, (ii) tax consequences to Issuer under 467 of receiving prepaid rent (i.e. how much included as income in year one and of that, how much offset with depreciation), (iii) what is desired return for Tax Equity and can that be met without depreciation benefits, (iv) what is effect on TenantCo of income inclusions due to "negative" depreciation and (v) what duration is necessary for Tax Equity to earn minimum return.

Summary of Terms: Transaction Parties

Other Parties:

Sub-Servicer

SolarCo will enter into a Sub-Servicing Agreement with one or more third party servicers who will perform day to day billing and collecting of amounts due under the Host Contracts

Sub-O&M Provider

SolarCo will enter into Sub-O&M Agreement(s) with one or more third party O&M provider(s) who will perform all on site maintenance and repairs on the Solar Energy Systems

Back-Up Servicer

An unrelated third party servicer on standby (and possibly acting as Sub-Servicer) to perform billing, collection, and reporting functions should SolarCo be terminated as Manager in whole or in part under the Management, Operations and Maintenance Agreement

Back-Up O&M Provider

An unrelated third party on standby (and possibly acting as a Sub-O&M Provider) to perform operation and maintenance functions should SolarCo be terminated as Manager in whole or in part under the Management, Operations and Maintenance Agreement

Summary of Terms: Transaction Parties

Transition Manager

A national banking association or other strong credit with relevant experience appointed pursuant to a Transition Management Agreement among Issuer, TenantCo and Indenture Trustee.

- Transition Manager will:
  - monitor performance of SolarCo as Manager and the Sub-O&M Provider(s)
  - analyze the impact of terminating either of them in such roles
  - make recommendations to the Indenture Trustee regarding transitioning all or a portion of those duties to one or more successor Managers or O&M Providers (including to a standby parties) in the event that stipulated performance standards (set out in the Management, Operations and Maintenance Agreement and generally described below under Manager Termination Events) are not met, and
  - develop and oversee any transition plan ultimately approved by Indenture Trustee and Noteholders

Indenture Trustee

A trust department or trust company of a national banking association will act as lienholder, custodian and paying agent for Noteholders and any bridge loan provider. May also act as the paying agent with respect to the Master Collection Account described below.

Summary of Terms: Description of Asset Backed Notes

The Asset Backed Notes consist of a single tranche of Notes issued by Issuer, bearing a fixed rate of interest and expected to have a credit rating of [A]

- The Notes are secured by: the Solar Energy Systems, the Master Lease (including contract rights collaterally assigned by TenantCos to secure payment of rents due thereunder), Issuer's managing member interest in Tenant Cos, and certain other contingent rights
- Principal is payable pursuant to a targeted amortization schedule with additional principal payable upon the occurrence of certain trigger events or events of default
- Legal final maturity of Notes is [t/b/d]
- Note proceeds are used to retire the bridge loan and pay any remaining deferred purchase price for the Solar Energy Systems to ProjectCo

As a result of the foregoing transactions, at closing of the securitization SolarCo will own 100% of the equity in ProjectCo, ProjectCo will own a 100% of the equity in Issuer and Issuer will own a 1% managing member interest and the Tax Equity Investors will own a 99% membership interest in each TenantCo. Issuer will own the solar assets, subject to a lien in favor of the Noteholders, but also subject to the rights of TenantCo as lessee under the Master Lease.

(See *Figure 1* for diagram of the overall Structure)

Summary of Terms: Description of ITC and Rights of Tax Equity

The Solar Energy Systems are eligible for the investment tax credit (*"ITC"*) under Section 48 of Internal Revenue Code. Pursuant to a pass through election made by the Issuer under the ITC related tax regulations, the ITC will be allocated to TenantCo. The ITC equals 30% of the fair market value of the leasehold interest of TenantCo in the Solar Energy Systems.[4]

- The Tax Equity investors will invest in membership interests in TenantCo and will be allocated 99% of the ITC and will also receive 99% of all profit and loss allocations at TenantCo and of membership interest cash distributions by TenantCo until the date (the "Flip Date") occurring on the later of (i) expiration of the recapture period and (ii) the date when Tax Equity has earned an agreed minimum annual return.
  - Typical per annum overall returns have been 15-18% and target for minimum per annum cash distributions is approximately 2%
  - After the Flip Date, the Issuer will receive the 95% of all allocations and distributions and the Tax Equity investor will receive 5%.
  - ProjectCo, as Managing Member, also has the option, after the Flip Date, to purchase the Tax Equity membership interest in TenantCo at fair market value to be determined at the time of purchase.[5]
- Tax Equity voting rights will be limited to Major Decisions (as described below); otherwise all member decisions will be made by the Managing Member of the applicable entity. All day to day decisions not subject to approval by the members or the Noteholders will be made by the Manager in accordance with the management standard set forth in the Management, Operations and Maintenance Agreement.

---

4 Generally ITC claimed is 30% of the FMV of the Solar Energy System so long as term of Master Lease is at least 80% of expected life; otherwise is an allocable portion of such FMV. Computation of FMV is based on various measures, including (i) cost of construction plus a mark-up and (ii) discounted value of the net revenues expected from the associated Host Contracts.

5 Parties to determine whether to use a put or call rights in light of recent tax rulings.

Summary of Terms: Proposed Flow of Funds

Master Lockbox/Collection Account:

Under the servicing arrangements all Collections under the Host Contracts, any REC sale arrangements, production guarantees, warranties and other indemnities, if any, are remitted to a Master Lockbox and deposited into a Master Collection Account. Available funds on deposit in the Master Collection Account are disbursed by the designated Paying Agent as follows:

- To the Issuer's Collection Account, amounts due from TenantCo in respect of base rent, termination payments and contingent amounts due under the Master Lease[6];
- To the Manager (or other acting O&M provider), O&M fees and related expenses, up to a pre-agreed cap;[7]
- t/b/d – the O&M reserve account is topped up to target level[8]
- To the TenantCo Collection Account, all remaining available collections

The Paying Agent will apply funds per above waterfall based on monthly servicing report prepared by Manager.

(See *Figure 2* for diagram of the Flow of Funds)

---

6 For purposes of modeling this transaction, the parties will likely need to identify the target annual cash distribution needed to attract Tax Equity investors in order to back into the base rent payments payable under the Master Lease. Termination payments will generally consist of (i) lump sum termination fees payable by a host if it defaults under its Host Contract (typically in an amount equal to the present value of the expected future payments under such Host Contract), (ii) the purchase price paid by a host for a Solar Energy System if a host exercises a purchase option under its Host Contract and (iii) proceeds of insurance on a Solar Energy System that suffers a casualty loss. Contingent amounts could include (i) a specified portion of the proceeds from sales of RECs and other environmental attributes, (ii) proceeds from a remarketed Solar Energy System if the original Host Contract is terminated and (iii) other amounts t/b/d.

7 Payment of O&M fees and expenses are technically an obligation of TenantCo as it is the party with exclusive right to use and operate the Solar Energy Systems, but the agreement governing the Collection Account will have TenantCo pre-direct payment of these amounts in accordance with servicing report.

8 Could be paid here, or pursuant to the waterfall applicable to amounts in Issuer's Collection Account, depending on how rents are structured and negotiation as to who takes the risk on shortfalls if inverters are not replaced.

Summary of Terms: Proposed Flow of Funds

Application of funds in TenantCo Collection Account:

Available funds remitted to TenantCo primarily consist of payments received under Host Contracts that are in excess of the base rent, termination payments and other contingent amounts due from TenantCo to Issuer under the Master Lease.

Available collections at TenantCo are applied as follows:

- Payment of various budgeted operating expenses of TenantCo (such as insurance and property taxes)
- Priority distribution to Tax Equity investor on its membership interest
- Management fee to Managing Member
- Remainder to establish reserves for unbudgeted expenses and then to members of TenantCo in accordance with their Percentage Interests

"Percentage Interest" means, until the Flip Date, 99% for the Tax Equity Member and 1% for Issuer as the Managing Member and on and after the Flip Date, 95% for Issuer as the Managing Member and 5% for the Tax Equity Member.

Summary of Terms: Proposed Flow of Funds

Application of Funds in Issuer Collection Account:

- Available collections are applied prior to an acceleration event as follows:

1. Manager fees (without double counting for amounts paid for O&M fees directly from Master Collection Account)
2. Indenture Trustee, Transition Manager, custodian and backup provider fees and expense reimbursements up to agreed cap amounts
3. Other budgeted expenses, if any, up to agreed cap amounts
4. Note interest
5. Note principal - targeted amount for current period plus any targeted amounts not paid in prior periods
6. Liquidity Reserve top up, which varies based on triggers in effect per below
7. Note principal – unscheduled[9]
8. t/b/d - Buy-out/recapture liability reserve [10]
9. Fees and expenses in excess of budget caps
10. Remainder to a "residual account" free of lien of Indenture and available for distribution to member(s) of Issuer

- Available collections after an acceleration event are applied as above except that all excess cash flow after #4 is applied to pay down principal of the Notes until either the trigger is cured or an Event of Default is called, and lower priority items remain unpaid until Notes are repaid in full or the trigger is cured.

---

9 Unscheduled principal would pick up remaining available collections sufficient to maintain minimum OC and/or minimum DSCR, including adjustments needed as a result of prepayments or loss recoveries on Host Contracts or Solar Energy Systems. TBD

10 Some parties may prefer to fund monies into a reserve to be used to fund a buyout of Tax Equity or other amounts due them. If fair market value of Tax Equity is based on present value of remaining cash flows under Host Contracts, then applying excess cash flow to pay down Notes may make more sense (depending on relationship of discount rate used to determine present value of Host Contract cash flows vs interest rate plus any yield maintenance fee due on Notes).

Summary of Terms: Proposed O&M Reserve

O&M Reserve:

A reserve account is established to fund the cost of replacement inverters for the Solar Energy Systems. $0.0 funded at closing. Funding is targeted to commence in the [10th] month after closing or after any prefunding period ends, based on computations included in the monthly servicing report prepared by Manager.

- Target balance = $Y/kW (AC) of aggregate power in the Issuer's fleet that has not yet had inverter replaced at least once over life of deal
- Periodic contribution = $X/kW (AC) per month
- Plus, if amounts in O&M Reserve fall below Z% of target balance, additional funds are added to the periodic contribution amount until the reserve balance is at least equal to Z% of target balance

Summary of Terms: Proposed Liquidity Reserve for Asset Backed Notes

Liquidity Reserve:

A liquidity reserve for the Notes is funded at closing with an initial deposit equal to [6] months of interest on the Note balance. Thereafter, target balance is [t/b/d] months of interest on remaining Note balance.

- If monthly DSCR is not at least [t/b/d]% of Minimum DSCR (a "DSCR Trigger Event"), all remaining funds are diverted to Liquidity Reserve pending cure)
- DSCR Trigger Event is cured when DSCR ratio is again at least equal to t/b/d% of Minimum DSCR for 3 consecutive months
- DSCR Acceleration Event: means 3 month average DSCR is lower than t/b/d%
- If DSCR Acceleration Event occurs, waterfall shifts to accelerated waterfall
- Funds in Liquidity Reserve can be used to pay: items 1-3 in waterfall and, after DSCR Acceleration Event (or Event of Default) occurs, item #4 in waterfall
- DSCR means [t/b/d]

Summary of Terms: Manager Termination Events

The Manager may be terminated (and a successor Manager appointed to perform its duties) if any of the following events occurs:

- Funds in Failure to deposit or remit funds to Lockbox or Indenture Trustee
- Failure to deliver reports
- Insolvency events
- Manager ceases to be engaged in business of managing and operating Solar Energy Systems
- Other breaches of material reps, warranties, covenants etc. that are not cured within 30 days
- If SolarCo is Manager, an Event of Default occurs and is continuing
- If SolarCo is Manager, [DSCR is less than ___% for __ periods]/TBD

Summary of Terms: Events of Default

The maturity of the Notes could be accelerated and other remedies pursued if any of the following events occurs:

- Failure to pay interest monthly
- Failure to pay principal at maturity
- Breaches of other material reps, warranties, covenants etc. that are not cured within 180 days if pre-recapture and 30 days if post-recapture
- Specified insolvency events

Typical lienholder remedies would include the right to foreclose on and liquidate the assets of the party granting the lien. However, because the Solar Energy Systems are leased to TenantCo under the Master Lease, so long as TenantCo is not also in default under the Master Lease, pursuant to the terms of the Master Lease and a Nondisturbance Agreement between Issuer and TenantCo, the Indenture Trustee would become owner of the solar assets subject to the rights of TenantCo to continue to use, operate and control the Solar Energy Systems for the remaining term of the Master Lease. Thus, there would be no disposition of interests in the Solar Energy Systems by TenantCo or its members and no recapture liability for Tax Equity with respect to the ITC benefits should be triggered.

Summary of Terms: Tax Equity Rights re Major Decisions

Major Decisions that require the consent of the Tax Equity member(s) shall include:

- Removal from service or disposition (other than by assignment to the Issuer or sale to host pursuant to Host Contract) of any Solar Energy System prior to the Flip Date;
- Removal of the Manager and replacement with a party other than the Back-up Servicer or Backup-OM provider prior to the Flip Date;
- Modifications to the payment priority provisions applicable to the Master Collection Account;
- Issuance of Notes to repay bridge loan, if applicable, in an amount that exceeds $t/b/d or t/b/d% of such bridge loan or with a stated interest rate greater than ___% per annum.[11]

NOTE: Major Decisions shall not include whether to foreclose on the Master Lease or the TenantCo membership interest by the Indenture Trustee so long as the Master Lease otherwise remains in effect and TenantCo continues to have a right to quiet enjoyment under the Non-Disturbance Agreement between Issuer and TenantCo

11 If Tax Equity closes with bridge loan in place, it effectively will be subordinated to any debt at Issuer, so likely will care that debt service does not exceed a certain level. Compare leveraged lease transactions (which often have covenants governing refinancing of debt and sharing of control over remedies) and new market tax credit transactions.

Summary of Terms: Description of Solar Energy Systems

A sample pool of Solar Energy Systems with the attributes described below was used to create a cash flow model showing projected collections and applications thereof for purposes of presenting a mock transaction using this structure to rating agencies and other interested parties.

- 19 Commercial PV rooftop systems
- Overall Portfolio Project Size: 6.97 MW (DC)
- Range of Project Size: 47 to 1,500 kW DC
- Remaining Term Range: months 166 to 288 months
- Seasoning Range: 6 to 52 months
- Host Contracts: All PPAs, most with fixed rates, some with escalators
- Weighted Average Price per kWh: $0.1770
- Weighted Average First Year Production: 517,518 kWh
- Panel Output Degradation Rate: 0.50%
- NPV of Project Cashflow: $24,088,730
- 6% Discount Rate

Tandem Securitization and ITC Lease Pass-Through Structure *Figure 1*

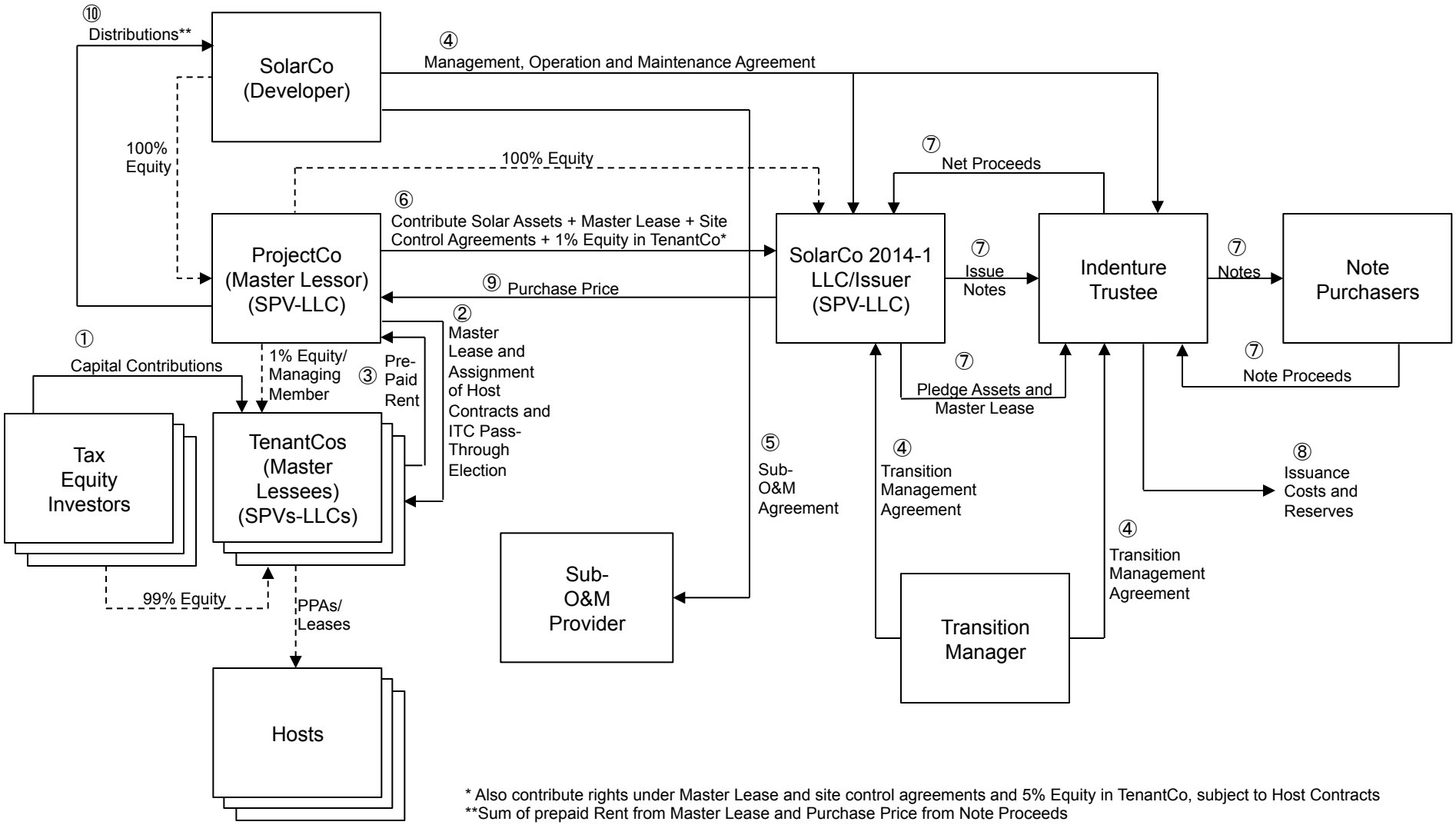

* Also contribute rights under Master Lease and site control agreements and 5% Equity in TenantCo, subject to Host Contracts
**Sum of prepaid Rent from Master Lease and Purchase Price from Note Proceeds

Tandem Securitization with Lease Pass-Through: Flow of Funds *Figure 2*

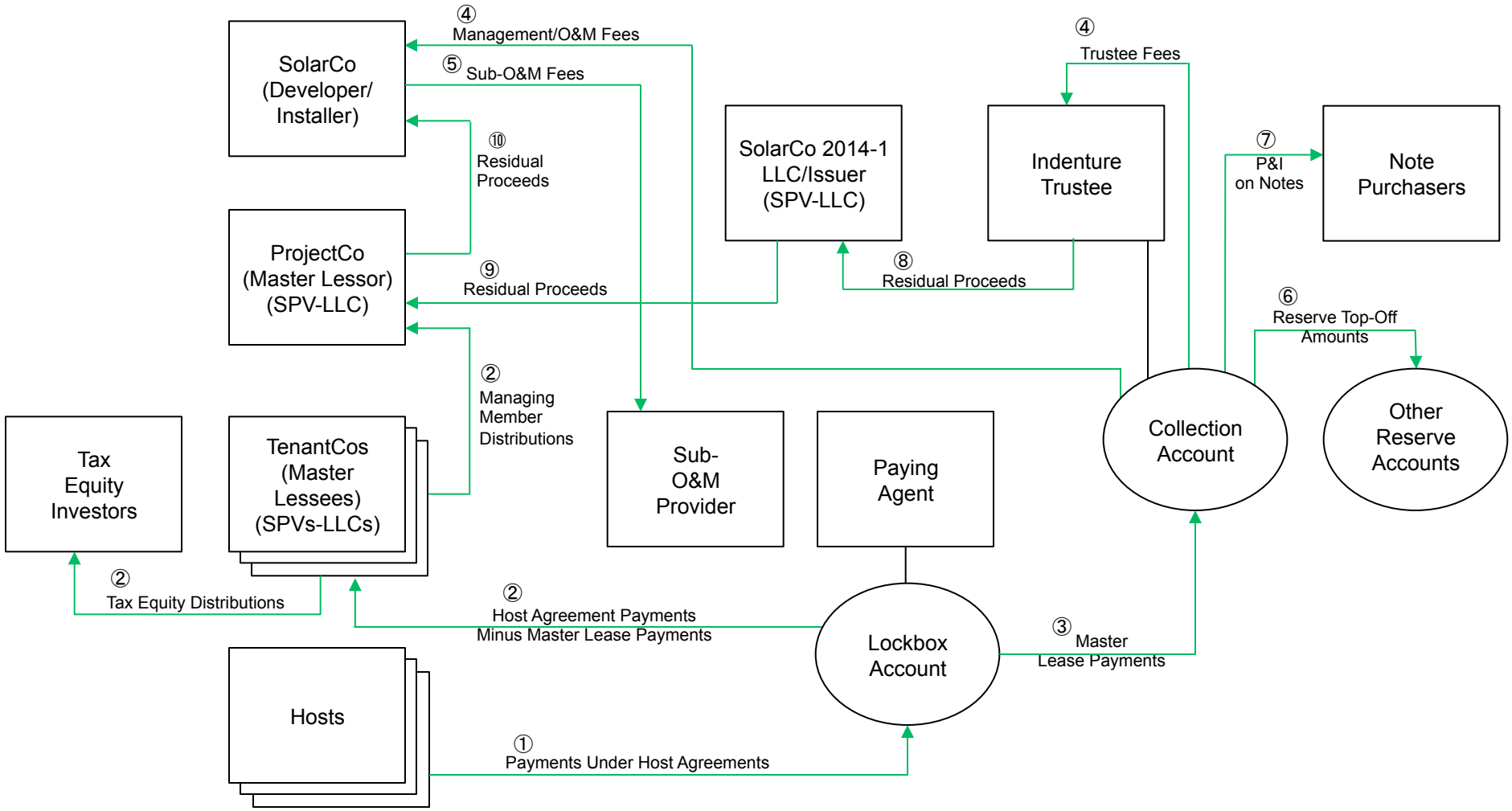

Acknowledgements

The Solar Access to Public Capital working group is heavily indebted to **Ronald Borod** of DLA Piper LLP (US) and **Melanie Gnazzo** of Chapman and Cutler LLP for developing the proposed legal structure and drafting the proposed term sheet for the Tandem Tax Equity and Securitization mock transaction. Special thanks also to **Mary Rottman** of Rottman-Associates for guiding this effort and providing critical feedback at every step of the process. The expertise and dedication that these three have brought to bear were instrumental to the success of the mock transaction presentation process and the working group's larger efforts to tackle expanding capital for solar.

Additional thanks to **Forrest Milder** of Nixon Peabody LLP**; Chris D'Angelo** and **Brandon Hadley** of KattenMuchinRosenman LLP; **David Ridenour** of Orrick, Herrington & Sutcliffe LLP; and **David Sykes** of Kilowatt Financial for their contributions and insights which have helped to shape the proposed structure and terms. Thanks also to **John Joshi** of Capital Fusion Partners, and **Conrad Caplin**, **Nathan Gabig,** and **Stephen Henne** of KPMG for building a financial model based on projected cash flows from a sample portfolio that was used to vet the proposed structure, and to **Mike McGuire** of Wiser Capital for modeling the liability structure of this mock transaction. Lastly, thank you to all the independent engineering firms who provided technical feedback about asset management and portfolio due diligence, including: **Black & Veatch**, **DNVGL**, **Leidos**, **TÜV Rheinland**, and **VDE**. Special thanks to **Paul Detering** of Redwood Insights for leading this IE committee, and **Sarah Kurtz** of NREL for additional technical contributions.

The term sheet and diagrams for the proposed Tandem Tax Equity and Securitization transaction have been reviewed by a broad spectrum of players in the solar, finance, accounting and legal professions, and we would like to express our gratitude to these additional reviewers for their feedback and for having taken such a keen interest in our activities. We are releasing these documents to the public so that issuers, counsel, ratings agencies, investors, and other stakeholders may make use of them to inform their own decision-making and to drive growth in the solar asset class.

This document has been prepared for informational purposes only. It is general in nature and based on authorities that are subject to change. It is not intended to provide legal or tax advice. Accordingly, readers should consult with, and seek the advice of, their own counsel with respect to any individual situation that involves the material contained in this document, the application of such material to their specific circumstances, or any questions relating to their own affairs that may be raised by such material.